HNSCR-LA-ZQ SERIES THREE PHASE SCR POWER REGULATOR

Shanghai AOYI Electric Co., Ltd.

Add:No.18 Baosheng Road, Songjiang District, Shanghai, China Tel: +86-021-67679060
Fax:+86-021-67679089 Email:aoyidq@126.com Web:www.aoyidq.com

Product Featrues

1. Novel structure, high quality
2. With over temperature protective function
3. There is no fast fuse for over current protection
4. Multipurpose LED indication for working condition
5. Adjustable for maximum and minimum output
6. Applied for high power load
7. Input voltage range suitable for around the world
8. Input mode:4-20mA/0-5V/0-10V/Potentiometer

Technical Parameters

Rated Voltage:	Three Phase380VAC(three-phase three-wire)
Rated Current:	75A,90A ,120A,150A,200A,250A
Operation Frequency:	50Hz/60Hz
Output Mode:	Shift phase output
Control Signal:	4-20Ma, 0-5VDC, 0-10VDC ,VR Manual Regulation 2-10K
Input Impedance:	4-20mA(240Ω),0-5VDC(30K),0-10VDC(12K)
Protective Function	Built-in fast fuse for over current protection and if radiator is over temperature, SCR will stop output
Display Function:	LED Panel display working state and the cause of fault of SCR
Environment Conditions:	Temperature: below 45°C Humidity: below 90%RH

Product Dimensions

Rated Current	75A 90A 120A 150A	200A	250A
Dimension(mm) (WXLXH)	170X260X250	170X310X250	170X360X250
Installation Dimension(mm) (WXL)	150X150	150X200	150X250

Descriptions Of Connecting Circuit

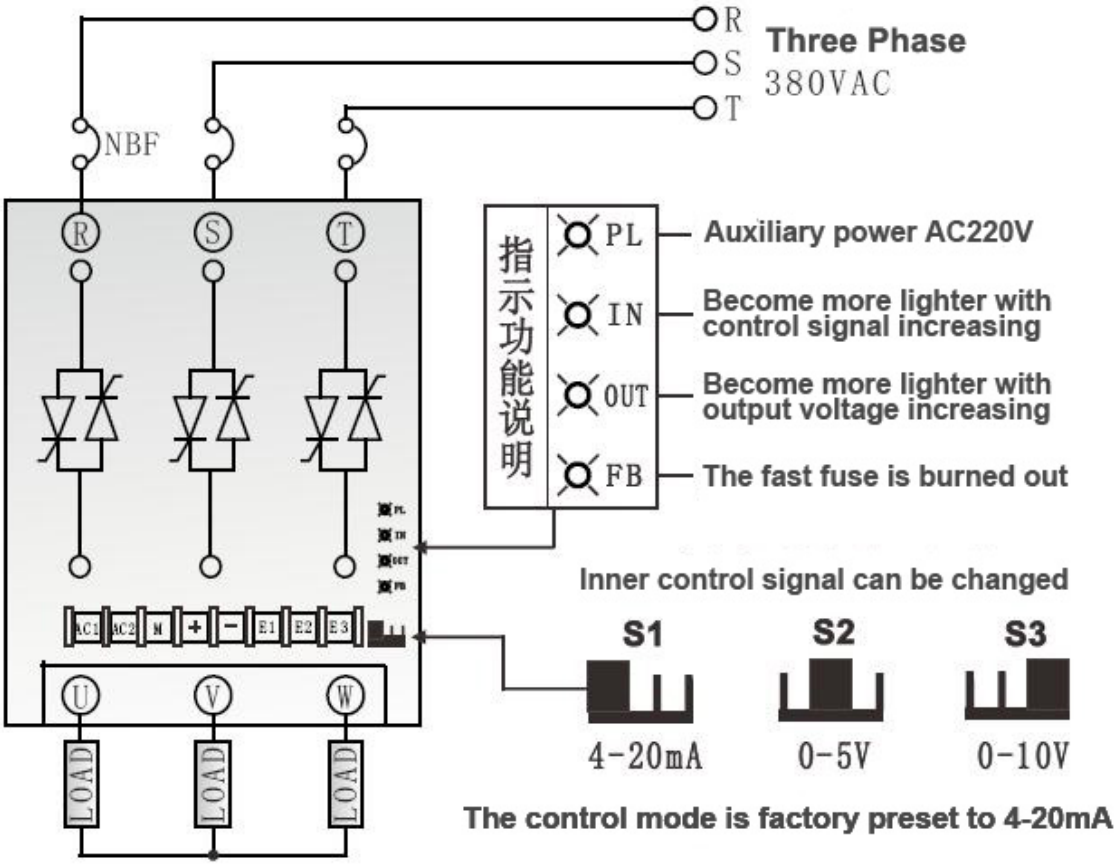

1. External signal control 0-100% output (Fig. 1)

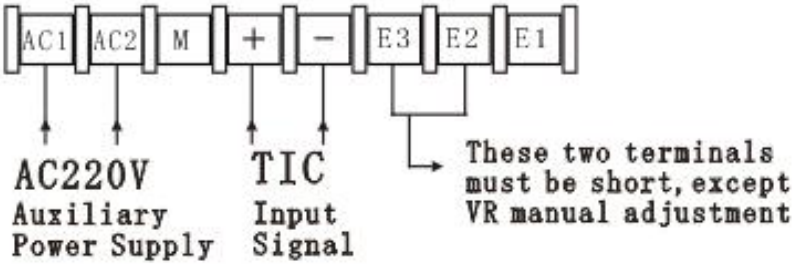

2. External signal control 0-100% output (Fig. 2), You also can use a switch to replace above the wire, which can control load output.

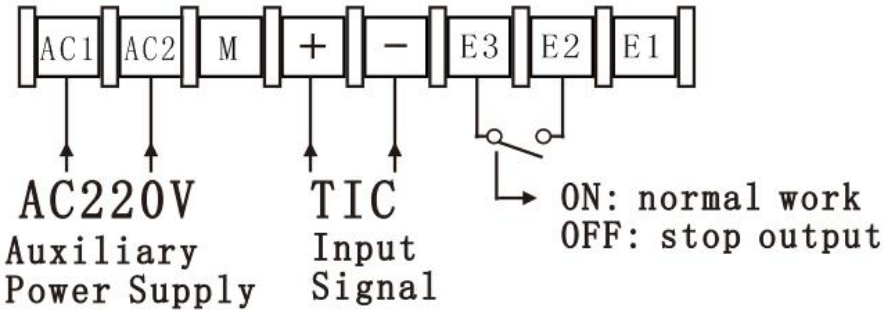

3. External signal control and VR Regulation 0-100% output (Fig. 3)

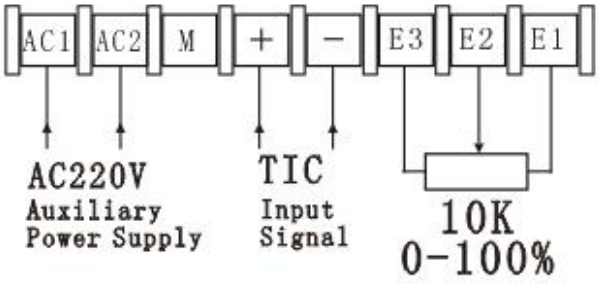

4. VR Manual Regulation 0-100% output (Fig. 4)

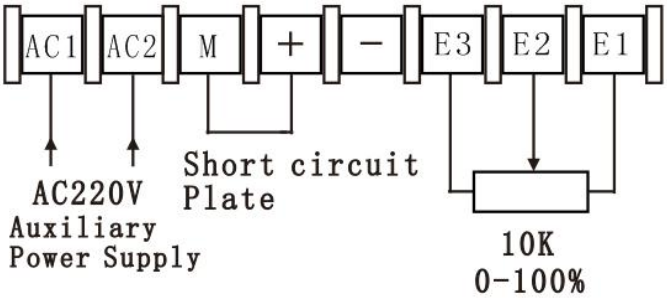

5. Multi-station be used in series (3 sets at most) (Fig. 5)

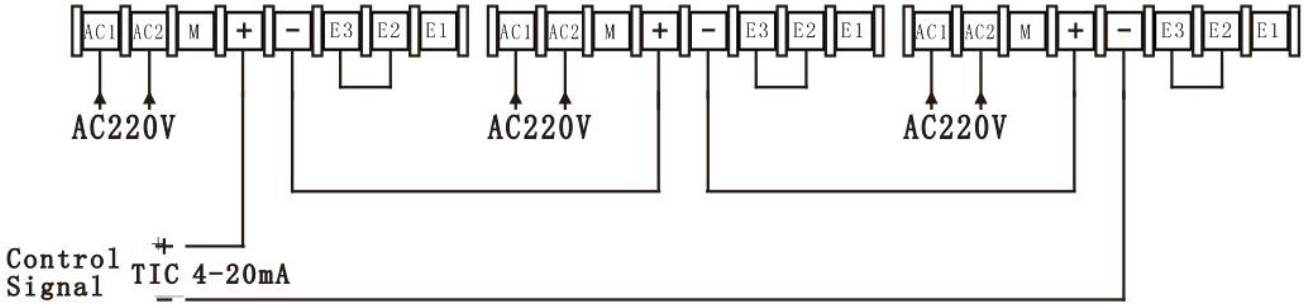

INSTALLATION WARNING

1. The main circuit adopts three-phase three-wire input without requirement for phase sequence.

2. Applicable load: Constant impedance, IR far-infrared Ray, UV lamp, etc.

3. For Y connection load, the center could not be connected with zero line, or SCR will lose control. If three phase load is not balance, the center of Y must be connected with zero line, and you can select three-phase four-wire product from our company.

4. SCR is a wall type, vertical installation ensures excellent heat dissipation.

5. SCR is a product with big current, please keep in mind that terminals (R.S.T) and (U.V.W) shall not be lock tightly, or SCR will be burned by terminal heating.

6. There is a fast fuse built in SCR for over current and short-circuit protection. If the fast fuse was

blown, the yellow LED is showing, right now please check the load circuit short or not or partial discharge, etc. After troubleshooting, please open the panel to replace the blown fuse with a fuse of the same rating. Please never hop up the fuse ampere.

7. If the temperature of the radiator exceeded 85℃, SCR will stop working automatically, if this, please check whether actual current of the load has exceeded the serviceable range of SCR or not. If not, please improve SCR operating environment and make it quite airy, then you can start it again.

8. If you want to stop the load, please disconnect control signal, and make SCR output 0V, then cut main circuit power supply.

9. When SCR was been laid up for three months or more, please clean dust surface of SCR and recharge it. The concrete method is as following: first please connect wires according to VR manual regulation diagram (Fig. 3); second adjust the potentiometer until the resistance between E1 and E2 is 0Ω; third send three phase power supply and adjust the potentiometer slowly to make SCR voltage output less than 20V, SCR should work like this for more than 5 minutes.

10. Use environment: good ventilation, keep out of the direct sun or thermal radiation, non corrosive and flammability.

DEBUGGING

If load current is less than 0.3A, SCR will not work properly, so please select 100W bulb as the load, which can make progress with debugging.

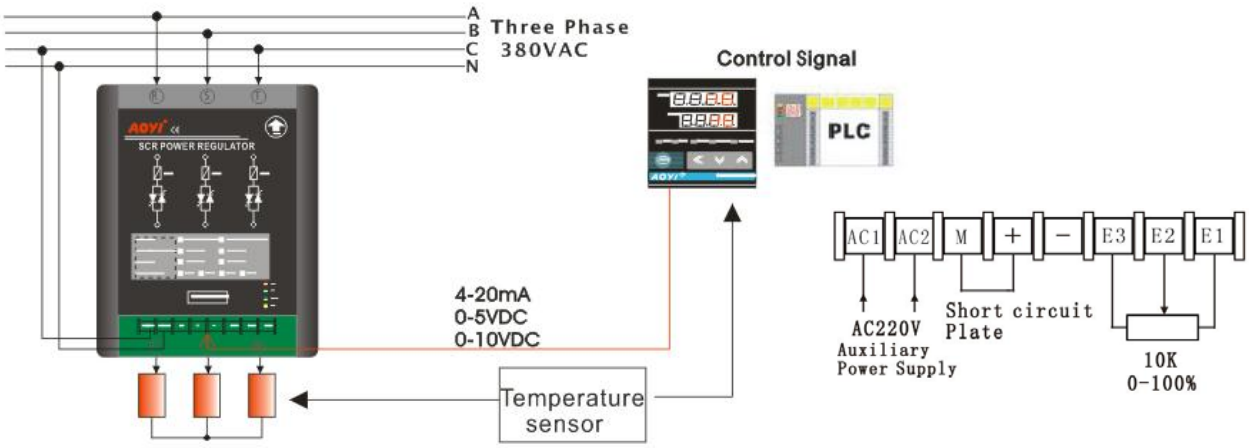

Please refer the above wiring diagram and ensure correct connecting. When you electrified 220VAC working power supply, “PL” red lamp will light. Then please electrify three phase power supply, when you rotate the potentiometer clockwise, “IN” and “OUT” green lamp will gradually light, and if you measure the voltage among in R, S and T with V gear of multimeter, it will change from 0V to the maximum value. The load bulb will change continuously, smoothly and equably, which should not appear saltation electrophoresis, jitter-free or nonlinear relation between changing trend and control signal.

Common Faults And Solutions

1. Phenomena: yellow LED is lighting

Fault Analysis: fast fuse is broken.

Test Method: cut all the power supply to open the panel, then measure two terminals of three fast fuse respectively with resistance gear of the multimeter. If the resistance of any fast fuse is infinite, which signals this fast fuse is blown and please replace it.

2. **Phenomena: non output (the load doesn't work)**

1) Fault analysis: there is not power supply input

Test method: test whether two terminals of power supply is 220VAC or not with V gear of the multimeter.

2) Fault analysis: there is not control signal input

Test method: test two terminals of control signal with V gear of the multimeter , please notice that red terminal of the multimeter corresponds to "+" and black corresponds to "-". If the multimeter displays less than 1.5V, which signals there is not control signal input.

3) Fault analysis: there is not three phase power supply

Test method: test voltage among in R, S and T with V gear of multimeter, if it is not AC380V, which signals there is not three phase power supply input.

3. Phenomena: half-wave output, although disconnected control signal, the load could not be shutoff fully. Load voltage meter displayed about 110V.

Fault analysis: the center of Y connection was been connected to zero line. You only need to disconnect it.

4. Phenomena: unbalanced load, the voltage meters of the load differ greatly

1) Fault analysis: there is one phase disconnected.

Test method: measure two terminals of the load with resistance gear of multimeter, if it **displayed** infinity, which signals the load has been damaged and disconnected.

2) Fault analysis: SCR has been break down.

Test method: disconnect load and measure resistance between R and U, S and V, T and W with resistance gear of multimeter, if the resistance value is less than 2K, which signals SCR has been broke down.

5. Phenomena: on-off type work, sometimes the state of the load is on, and sometimes is off.

Fault analysis: control signal connected reversely.

Remark:

Please notify load type, load connect method, load power, control signal type and so on when ordering.